ai157601754060_Instruction Flip-Down Tilt Out Laundry - LHF450-35 - web copy.pdf 1 12/10/2019 5:39:02 PM

MARATHON HARDWARE

Door Center

FLIP-DOWN LAUNDRY HAMPER 35L

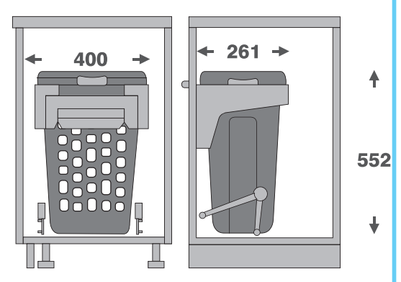

450mm/18"

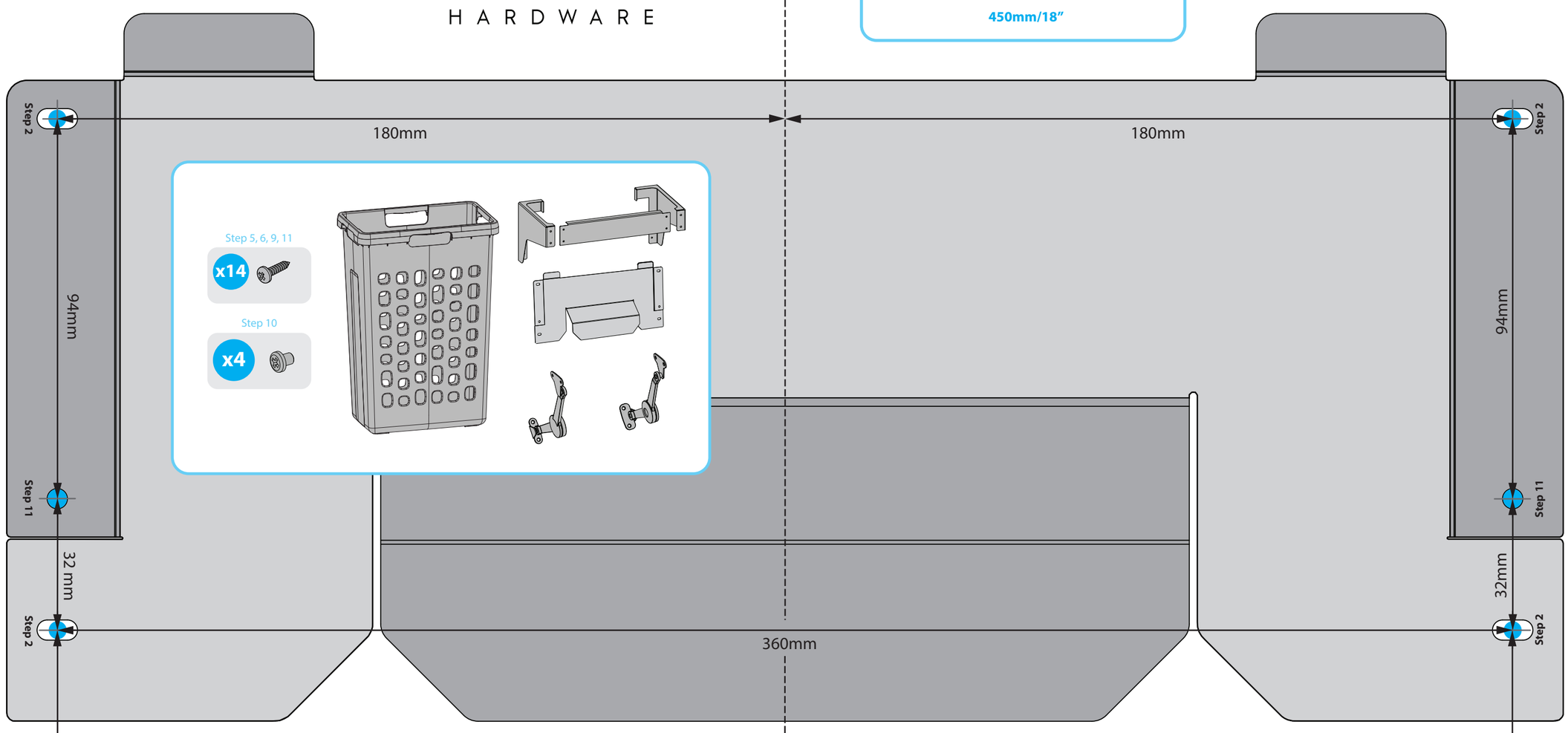

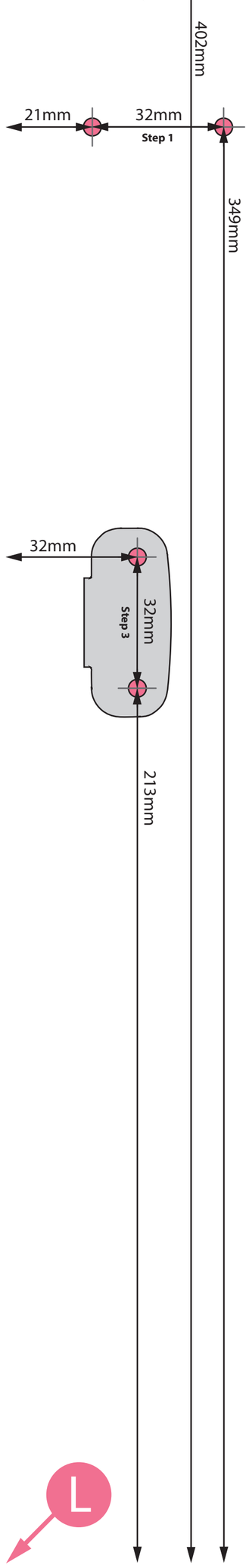

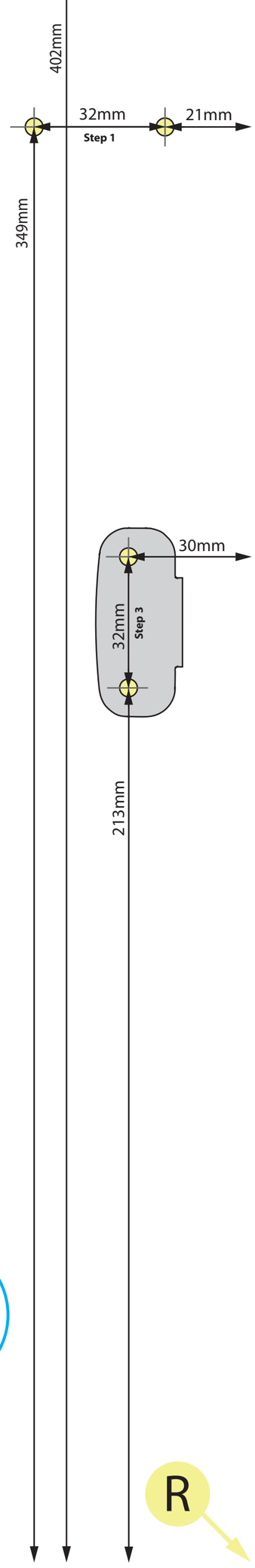

1

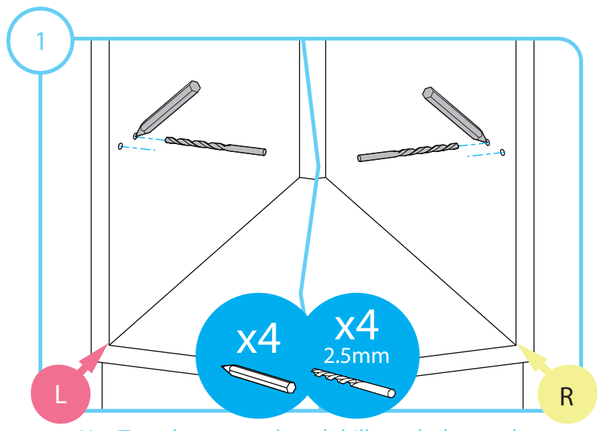

Use Template to mark and drill arm holes on the Left and Right sides of the cabinet.

2

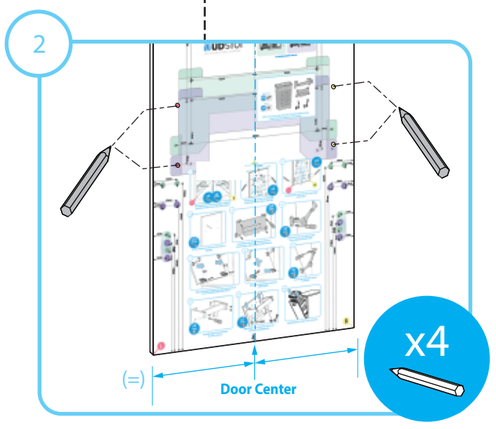

Measure the centre of door. Use Template to mark the bin tray holes.

3

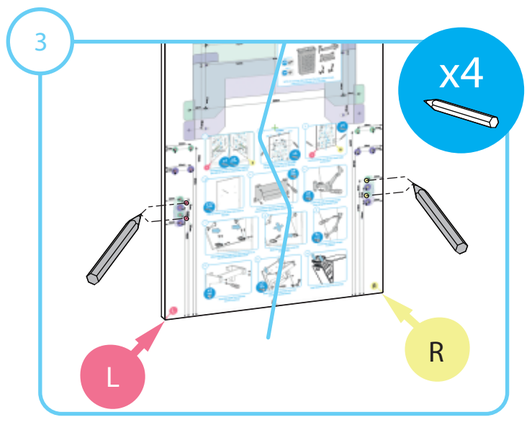

Use Template to mark arm holes on the door.

4

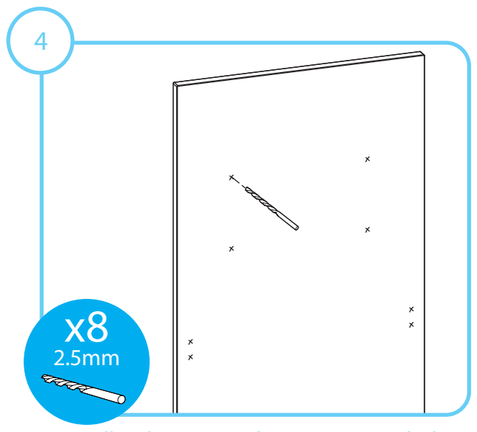

Drill 4x bin tray and 4x arm mount holes in the door.

5

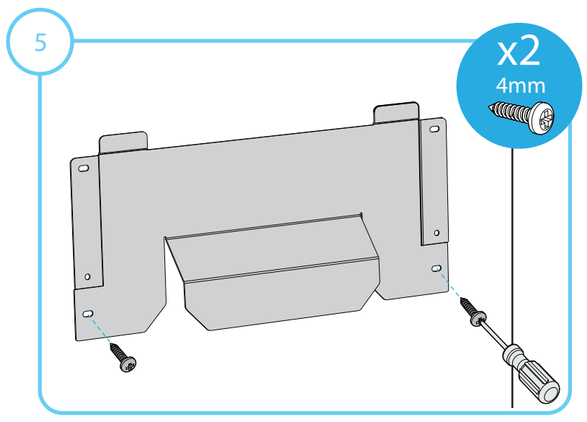

Screw bin tray bracket to the door.

6

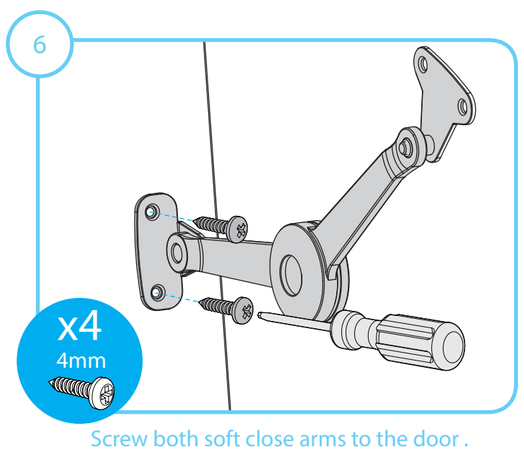

Screw both soft close arms to the door .

7

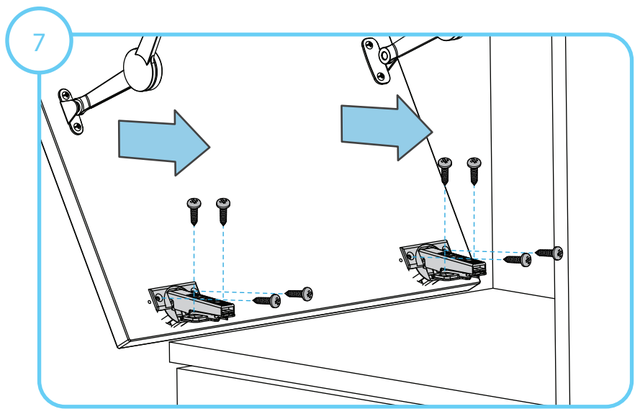

Mount the hinges to the door and cabinet according to the manufacturers instructions (hinges not supplied)

8

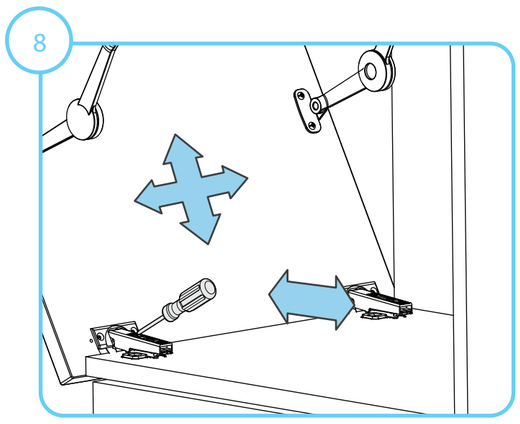

Make Door adjustments using the lower hinges.

9

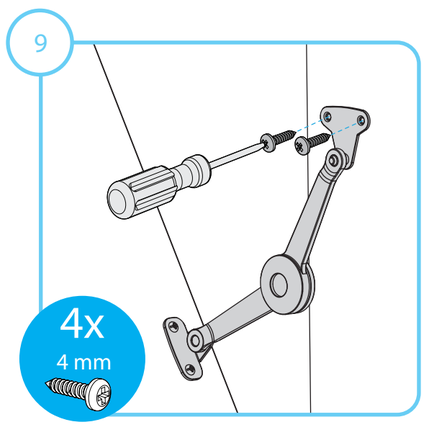

Screw both soft close arms to cabinet

10

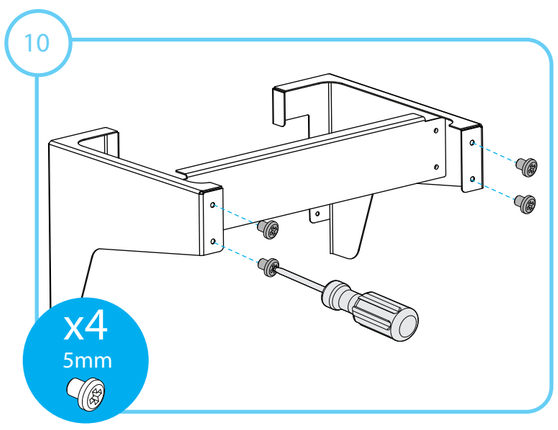

Assemble bin tray parts.

11

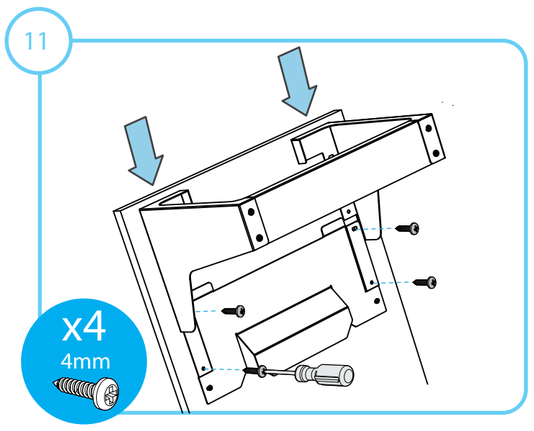

Insert bin tray and screw to the door.

12

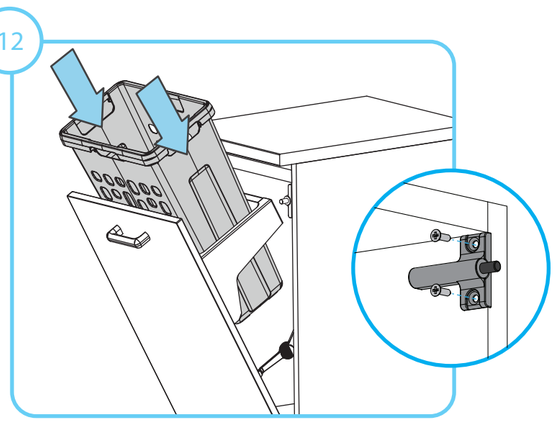

Insert basket into into the tray.
Install bumper assembly inside top right corner of cabinet.

Door Center

L

R